LCRA Transmission Services Corporation

RPG Review: Mountain Home

Substation Addition, Transmission Line Addition, and Transmission Line Voltage Conversion

November 18, 2016

Prepared by:

TABLE OF CONTENTS

1 EXECUTIVE SUMMARY 3
1.1 RECOMMENDATION 3
1.2 PROJECT SCOPE 3
1.3 BENEFITS OF THE PROPOSED PROJECT 6
2 BACKGROUND AND PROJECT NEED 7
2.1 ALTERNATIVES EVALUATED 9
3 ASSESSMENT FINDINGS 12
3.1 CONTINGENCY ANALYSIS 12
3.2 SUMMARY OF ALTERNATIVE BENEFITS 16
4 CONCLUSION 17
5 SUPPORTING INFORMATION 18
6 APPENDIX A 19

1 EXECUTIVE SUMMARY

1.1 RECOMMENDATION

This is a proposed project developed by LCRA Transmission Services Corporation (TSC) and Central Texas Electric Cooperative (CTEC).

The proposed project constructs a new 138-kV transmission line from the existing Hunt Substation to a new load-serving Mountain Home Substation and continuing on to the existing Harper Substation. The proposed project provides the transmission and distribution infrastructure needed to meet the growth in demand for electricity in the Mountain Home area. The project includes converting the existing 69-kV transmission line from Harper Substation to Live Oak Substation to 138-kV.

CTEC has concluded that the existing distribution system will not be able to support the load in the Mountain Home area after the winter of 2020/2021. The total project funding requirement for the recommended project (Alternative 1) is estimated at $77,323,000. Alternative 1 requires new transmission line construction as well as upgrades to existing transmission facilities and is estimated to be completed by December 1, 2021. Should the projected winter loads materialize before the project is completed, a mitigation plan to segment the 69-kV system to relieve potential contingency loading on the Gillespie and Fredericksburg autotransformers will be implemented to manage facility performance while the project is in progress.

This project will require a Certificate of Convenience and Necessity (CCN) amendment from the Public Utility Commission (PUC).

1.2 PROJECT SCOPE

- Construct a new 138-kV Mountain Home Substation.
- Construct a new 138-kV transmission line (approximately 7.5 miles) using 795 ACSR Drake (220 MVA) conductor that connects from the existing Hunt Substation to the new Mountain Home Substation.
- Construct a new 138-kV transmission line (approximately 11.5 miles) using 795 ACSR Drake (220 MVA) conductor that connects from the new Mountain Home Substation to the existing Harper Substation.
- Upgrade the Harper Substation to include a 138-kV bus and 138/69-kV autotransformer.
- Serve Harper load from the 138-kV bus.
- Convert Live Oak Substation to 138-kV and cut it into the existing 138-kV transmission line from Fredericksburg to Gillespie.
- Convert the existing 69-kV line from Harper to Live Oak to 138-kV using 795 ACSR Drake (220 MVA).
- Tie together the existing 69-kV lines from Gillespie to Live Oak and from Goehmann Tap to Live Oak to create a continuous 69-kV line from Gillespie to Goehmann Tap.

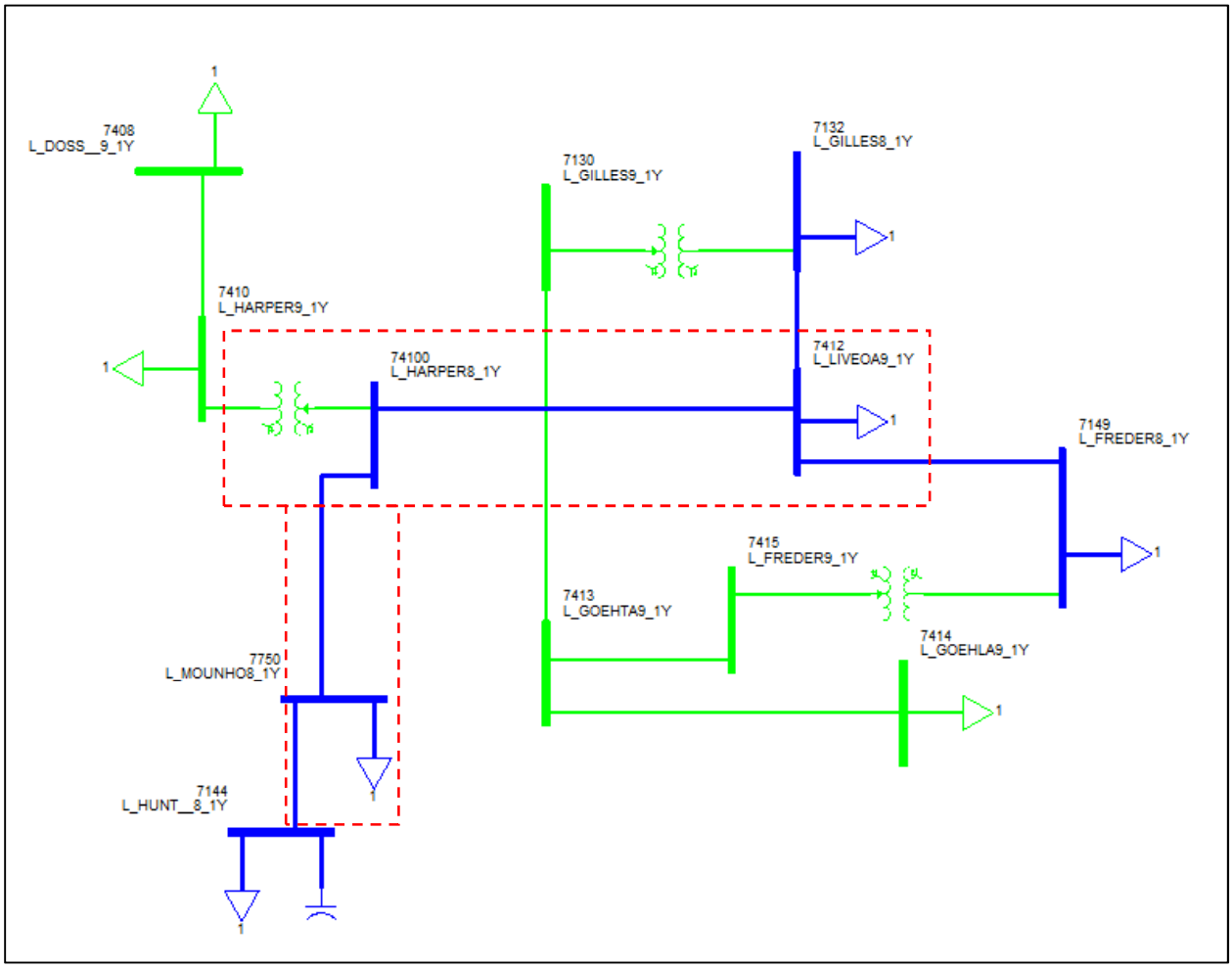

FIGURE 1: RECOMMENDED ALTERNATIVE (1) ONE-LINE DRAWING

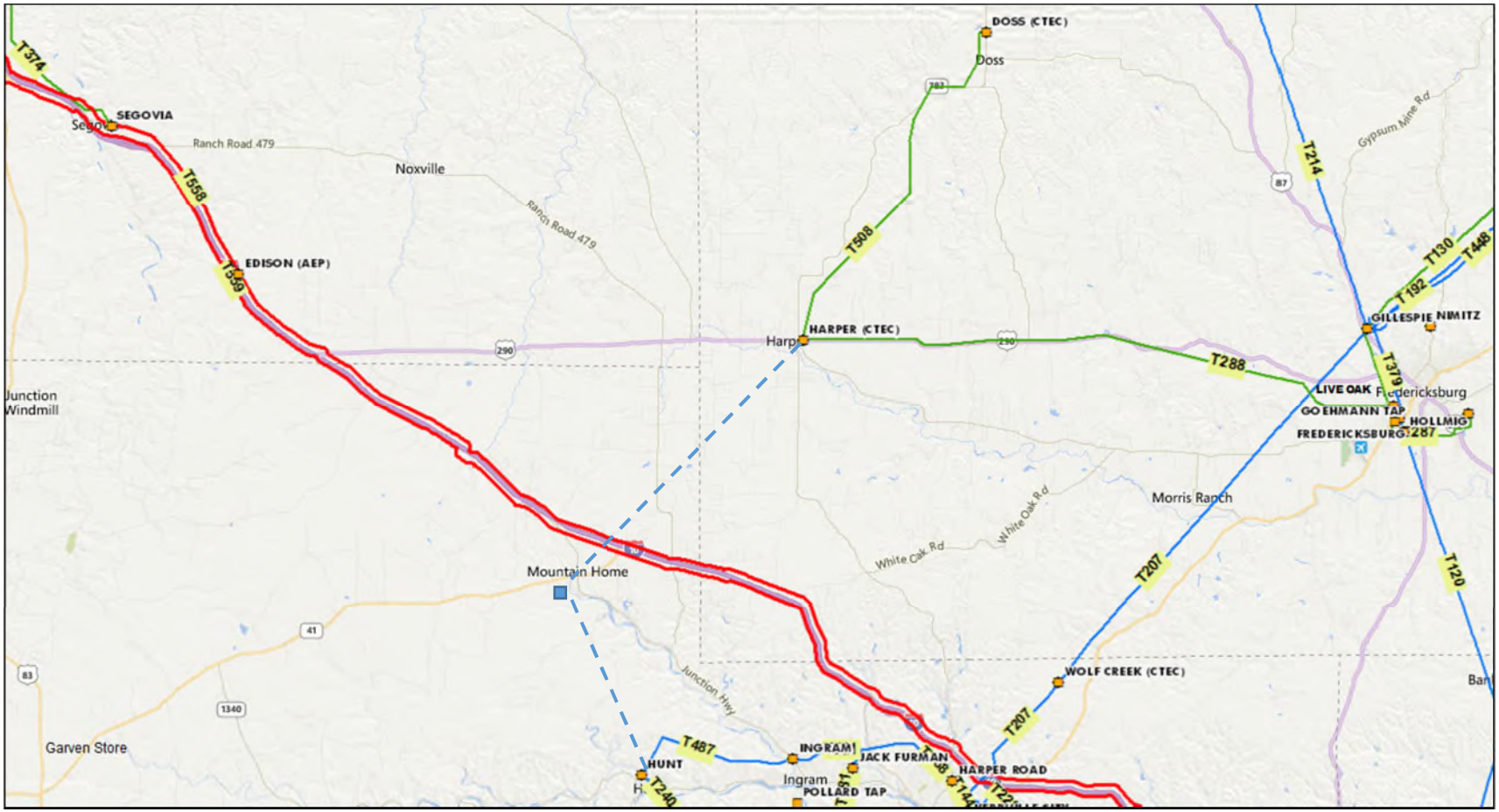

FIGURE 2: RECOMMENDED PROJECT MAP

(The dashed line representing the electrical connections of the recommended alternative is not intended to represent a physical route or the exact location of the new Mountain Home Substation)

1.3 BENEFITS OF THE PROPOSED PROJECT

- Provides the transmission infrastructure required to reliably serve load currently served from Harper Substation by providing looped transmission service to the existing substation as well as providing transmission service to the new Mountain Home Substation;
- Improves the voltage performance at Harper and Doss substations and increases the load serving capability of the existing transmission system in Kerr and Gillespie Counties;
- Reduces loading on the existing Gillespie and Fredericksburg autotransformers significantly so that they can reliably serve the area for the long-term;
- Removes the need to utilize a previously approved ERCOT constraint management plan (CMP[1]) for the Fredericksburg autotransformer;
- Addresses all steady state criteria violations (identified for this evaluation) in winter 2020/2021 using NERC P0, P1, P2.1, P3, and ERCOT Planning Guide Section 4.1.1.2 Reliability Performance Criteria;
- Addresses CTEC's 6 MW distribution circuit loading criteria violations for the long-term;
- Eliminates the risk of 100 MW of consequential load loss on the LCRA TSC system under NERC P6 contingency conditions in winter 2020/2021;
- Meets all project needs stated above at the lowest cost.

[1] ERCOT MP_2015_03 "Gillespie County"

2 BACKGROUND AND PROJECT NEED

Mountain Home, Texas is located along Interstate 10 west of Kerrville at the intersection of State Highway 41 and State Highway 27 and is located in the middle of an area located between Harper in the northeast and Garven Store to the southwest. Central Texas Electric Cooperative provides retail electric service to customers in this area via a 41.5 mile long distribution feeder extending from the 69-kV Harper Substation. The Harper Substation is served by a radial 21.6 mile 69-kV transmission line that extends from Live Oak Substation to Harper Substation and then another 14.2 miles from Harper Substation to Doss Substation. Load in the area served by Harper and Doss substations is forecasted to exceed 20 MW, a CTEC and LCRA TSC threshold for radial transmission service, by the winter of 2020/2021. The area heavily utilizes electric heating which leads to winter peak loads that are higher than summer peak loads. Table 1 presents the CTEC winter non-coincident peak load forecasts for the Harper and Doss substations from 2016 to 2021.

TABLE 1: CTEC PROJECTED WINTER PEAK LOADS AT HARPER AND DOSS[2]

BUS NUMBER	SUBSTATION	2016-2017 KW	2019-2020 KW	2020-2021 KW
7410	Harper	14,887	16,329	16,843
7408	Doss	3,217	3,596	3,732
Total:		18,105	19,925	20,575

As can be seen in Table 1, the combined winter peak load at the Harper and Doss substations will exceed 20 MW by December 2020. Harper and Doss substations, which are owned by Central Texas Electric Cooperative (CTEC), are currently served via a radial transmission feed from Live Oak Substation. CTEC utilizes LCRA TSC Transmission Planning Criteria for their own transmission planning; therefore, references to LCRA TSC criteria also represent CTEC criteria. LCRA TSC planning criteria requires looped transmission service for loads exceeding 20 MW. This criteria was developed to limit the amount of load interrupted for a single transmission outage and to coordinate with distribution system owners for the ability to restore service via distribution networks for areas with less than 20 MW of load. The load served from these stations is significant, accounting for 10.5 percent of CTEC's total system load serving obligation in winter 2020/2021.

Evaluation of the base case voltage levels at Harper and Doss 69-kV substations, using the July 2016 release of the SSWG 2020 summer peak case with coincident winter peak loads for the larger LCRA TSC service area and the Harper and Doss loads provided in Table 1, shows transmission voltages at both Harper and Doss substations below the accepted minimum 0.95 PU voltage under normal system conditions (Base Case) and 0.92 PU voltage under contingency in the LCRA TSC Transmission Planning Criteria. The voltages at Harper and Doss in winter 2020/2021 are provided in Table 2.

[2] Based on CTEC Distribution Study dated June 27, 2016.

TABLE 2: WINTER 2020-2021 VOLTAGE

BUS NUMBER	SUBSTATION	BASE CASE PU VOLTAGE
7408	Doss	0.8883
7410	Harper	0.8959

Additionally, the radial 69-kV transmission line serving Harper and Doss Substations is sourced by two autotransformers, one at Gillespie Substation and another at Fredericksburg Substation. The projected peak total load served by these two autotransformers, which also serve the Goehmann Lane, Eckert, and Nebo substations, will be greater than 50 MW by winter 2020/2021. Therefore if one autotransformer is not available, the loading on the other will exceed the two hour rating which is 49 MVA for each autotransformer.

In addition to transmission needs, CTEC completed a distribution study that concluded that the existing distribution system, sourced by Harper Substation, will be insufficient to meet the forecasted load by winter 2020/2021 even after the completion of voltage conversions from 12.5-kV to 24.9-kV on a network of 1,110 miles of distribution circuits. The winter peak load in the Mountain Home area, which is approximately 11 miles from Harper and currently served by a single distribution feeder from Harper Substation, is expected to grow to approximately 8.3 MW by 2021 (See Table 3).

CTEC studied a distribution alternative which would shift load from Harper Substation to Ingram Substation. The alternative would reduce distribution circuit loading to less than 6 MW in accordance with CTEC's criteria for distribution feeder loading[3]; however, even after the shift, the combined load at Harper and Doss substations would exceed 20 MW by 2023 making this alternative a short-term solution. There are no other distribution alternatives to reduce the load on the Harper and Doss transmission line. In addition, there is no available backup source with enough capacity to serve the Harper and Doss Substation load in the event of an outage.

CTEC concluded that a new Substation at the location of Mountain Home is needed to meet the requirement to serve the forecasted load adequately in the Harper and Mountain Home areas. The Mountain Home area is preferable for a new Substation since it is located at the center of load growth which reduces feeder lengths, improves voltage performance on the distribution system, reduces distribution losses, and provides distribution backup to Harper and Ingram substations.

In order to evaluate alternatives for serving the new Mountain Home Substation, the study area shown in Figure 2 was established. Table 3 contains the CTEC load forecast for the substations with load that will shift to the Mountain Home Substation for 2016 through 2021.

[3] CTEC Distribution Study dated June 27, 2016.

TABLE 3: CTEC PROJECTED WINTER PEAK LOAD IN STUDY AREA WITH MOUNTAIN HOME SUBSTATION ADDITION

BUS NUMBER	SUBSTATION	2016-2017 KW	2019-2020 KW	2020-2021 KW
7410	Harper	14,887	16,329	9,303
7408	Doss	3,217	3,596	3,732
Subtotal:		18,104	19,925	13,035
7142	Ingram (CTEC)	5,910	6,712	5,153
7750	Mountain Home	0	0	8,366
Total:		24,014	26,637	26,554

The projected reduction in distribution losses in 2020 due to the addition of Mountain Home Substation is 1,024 kW or 4.07% of the area load, reduced from 27,577 kW to 26,554 kW.

The existing 21.6 mile 69-kV transmission line from Harper Substation to Live Oak Substation has been in service for 62 years. The structures are wooden single pole and H-frame and require outages to replace aged and deteriorated structures. In fact, a recent inspection report showed that the line required replacement of 11 structures. Prior to this inspection, the last maintenance outage on this line was performed in 2009. As Harper and Doss are both solely served via this long radial line and do not have sufficient distribution resources to back up the loads, any substantial maintenance outage on this line would require an extended service outage and is therefore not feasible.

In addition, there are two 138-kV transmission loops to the west of Kerrville which are currently sourced from Verde Creek and Kerrville Stadium substations. These loops are directly connected to six substations which are projected to serve over 100 MW of load by winter 2020/2021. Since the transmission loops are sourced by only two substations, there is a risk of consequential load loss resulting from overlapping single contingencies. Alternatives that convert the Harper to Live Oak transmission line to 138-kV and connect Harper to the Kerrville area loops would alleviate this susceptibility and increase reliability.

2.1 ALTERNATIVES EVALUATED

Three alternative projects are presented which cost effectively address area needs for the long-term. All of the alternatives provide looped service to Harper Substation in order to limit load loss under single contingency to less than 20 MW, improve voltage performance for Harper and Doss Substation for the long-term by moving load off of the 69-kV system onto the 138-kV system which additionally relieves the autotransformers in the area, and provide a new Substation at Mountain Home with transmission service in order to address distribution needs. Table 4 summarizes the scope and cost for each alternative.

TABLE 4: ALTERNATIVE SCOPE AND COST SUMMARY
(Cost estimates include a 15% increase to the straight-line distance presented in the table below)

Alternative	Alternative Scope	Cost in Millions ($)
1	• Construct 138-kV Mountain Home Substation near the intersection of Hwy 41 and Hwy 27 (exact location to be determined) • Expand Harper Substation to include a 138-kV bus and a 138/69-kV autotransformer (45 MVA) • Serve load at Harper from 138-kV bus • Construct approximate 19 mile 138-kV transmission line from Hunt Substation through Mountain Home to Harper Substation (220 MVA) • Convert Live Oak Substation to 138-kV and cut into existing 138-kV line from Fredericksburg to Gillespie • Convert existing 69-kV line from Harper to Live Oak to 138-kV (220 MVA) • Connect existing 69-kV transmission lines currently terminating at Live Oak to create a continuous 69-kV line from Gillespie to Goehmann Tap	77.3
2	• Construct 138-kV Mountain Home Substation near the intersection of Hwy 41 and Hwy 27 (exact location to be determined) • Expand Harper Substation to include a 138-kV bus and a 138/69-kV autotransformer (45 MVA) • Serve load at Harper from 138-kV bus • Construct approximate 21.5 mile 138-kV transmission line from Ingram Substation through Mountain Home to Harper Substation (220 MVA) • Convert Live Oak Substation to 138-kV and cut into existing 138-kV line from Fredericksburg to Gillespie • Convert existing 69-kV line from Harper to Live Oak to 138-kV (220 MVA) • Connect existing 69-kV transmission lines currently terminating at Live Oak to create a continuous 69-kV line from Gillespie to Goehmann Tap	82.3
3	• Construct 138-kV Mountain Home Substation near the intersection of Hwy 41 and Hwy 27 (exact location to be determined) • Expand Harper Substation to include a 138-kV bus and a 138/69-kV autotransformer (45 MVA) • Serve load at Harper from 138-kV bus • Construct approximate 29 mile 138-kV transmission line from Wolf Creek Substation through Mountain Home to Harper Substation (220 MVA) • Convert Live Oak Substation to 138-kV and cut into existing 138-kV line from Fredericksburg to Gillespie • Convert existing 69-kV line from Harper to Live Oak to 138-kV (220 MVA) • Connect existing 69-kV transmission lines currently terminating at Live Oak to create a continuous 69-kV line from Gillespie to Goehmann Tap	97.7

Alternatives which provide looped service to Doss Substation were considered, however these alternatives would require an additional Substation and the conversion of the Doss to Harper transmission line (14.1 miles) to 138-kV without providing the benefits reducing the potential for load loss during overlapping single contingencies provided by options that terminate at Hunt and Ingram substations.

Alternatives which do not convert the 69-kV line from Harper to Live Oak to 138-kV were considered and rejected since they:

- require significant multi-step shunt compensation to maintain voltages while minimizing the impact of switching surges;
- do not provide the long-term benefits of the 138-kV alternatives; and
- do not extend the life of autotransformers at Gillespie and Fredericksburg by reducing the load on the 69-kV system they support.

3 ASSESSMENT FINDINGS

3.1 CONTINGENCY ANALYSIS

The impact to the transmission system resulting from each of the alternatives was evaluated for the period covering winter of 2020-2021. LCRA TSC Transmission System Planning Criteria applicable to the evaluation are shown in Table 5 below.

TABLE 5: PERFORMANCE CRITERIA

Type	Condition	Criteria
Thermal Loading	Pre-contingency	Not exceed 100% Rate A
Thermal Loading	Post-contingency	Not exceed 100% Rate B
Steady State Voltage	Pre-contingency	Not below 0.95 V (PU) Not exceed 1.05 V (PU)
Steady State Voltage	Post-contingency	Not below 0.92 V (PU) Not exceed 1.05 V (PU)
Steady State Voltage Deviation	Post-contingency at 3 or more buses	Not exceed 7% change
Transient Voltage	Post-contingency 90 cycles after normal fault clearing	Not below 0.92 V (PU)

STEADY STATE THERMAL RESULTS

Table 6 summarizes the reliability performance results under NERC P0, P1, P2.1, P7-ERCOT1, P3-ERCOT2, and P6-ERCOT3 contingencies for each alternative. These contingencies do not allow for load shedding as a mitigation plan. Table 6 reveals that either autotransformer will overload if the other is not available, since the area load served by the autotransformers is greater than 49 MVA, the two hour capacity of either autotransformer.

All alternatives relieve overloads on the Gillespie and Fredericksburg autotransformers. Loading on other lines in the area is either reduced or not significantly impacted by the alternatives studied.

TABLE 6: WINTER 2020-2021 SUMMARY
NERC P0, P1, P2.1, P7-ERCOT1, P3-ERCOT2, P6-ERCOT3
(See Appendix A for contingency categories associated with these loading percentages)

MONITORED ELEMENT	RATING (MVA)		MAXIMUM LOADING (PERCENT OF RATE B)			
	A	B	BASE CASE	ALT1	ALT2	ALT3
7130 L_GILLES9_1Y69.000 7132 L_GILLES8_1Y138.00 1	45	49	109	52	52	52
7149 L_FREDER8_1Y138.00 7415 L_FREDER9_1Y69.000 1	45	49	104.1	48.1	48.1	48.1
7413 L_GOEHTA9_1Y69.000 7415 L_FREDER9_1Y69.000 1	58	58	85.3	39.3	39.3	39.2

STEADY STATE VOLTAGE RESULTS

Analysis shows that in the base case the voltages at Harper and Doss are less than 0.9 PU V. In addition to LCRA TSC voltage criteria violations, ERCOT requires that voltages do not fall below 0.9 PU V under contingency; therefore the voltages also violate ERCOT planning criteria. All of the alternatives improve voltages under all NERC and ERCOT contingencies to values above the planning criteria limits.

TABLE 7: WINTER 2020-2021 BASE CASE PU VOLTAGE

MONITORED ELEMENT	MINIMUM VOLTAGE (PU)			
	BASE CASE	ALT 1	ALT 2	ALT 3
7408 L_DOSS__9_1Y69.000	0.8883	0.9922	0.9914	0.9931
7410 L_HARPER9_1Y69.000	0.8959	0.9989	0.9981	0.9998

TRANSIENT VOLTAGE RESULTS

Following the steady state assessment and based on the estimated cost of the alternatives, an assessment of the improvement in transient voltage recovery was performed for Alternative 1.

The assessment reveals significant transient stability criteria violations. LCRA TSC criteria requires voltages to recover to 0.92 PU voltage within 90 cycles after normal fault clearing for NERC single element contingencies. Though ERCOT criteria only applies to buses at 100-kV or higher, it still provides a relevant benchmark for voltage performance at lower voltages. ERCOT criteria requires voltages to recover to 0.9 PU voltage within five seconds after normal fault clearing for a NERC P1 contingency. A 3-phase 10 cycle fault at the Gillespie 69-kV bus followed by the tripping of the Gillespie autotransformer was modeled on the system. The voltages at all area buses did not meet LCRA TSC or ERCOT criteria for voltage recovery in the base case as shown in Figure 3. Alternative 1 corrects transient voltage recovery for the entire area after a fault which trips the Gillespie autotransformer as shown in Figure 4. Similar results would be expected for the other alternatives as well.

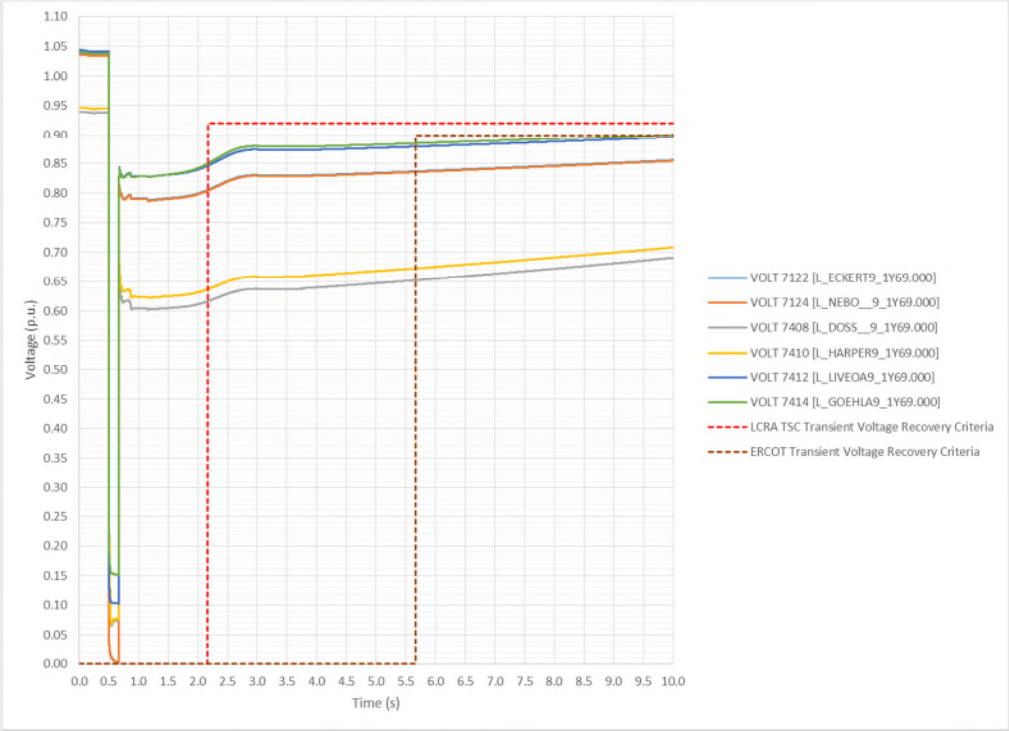

FIGURE 3: BASE CASE VOLTAGE RECOVERY

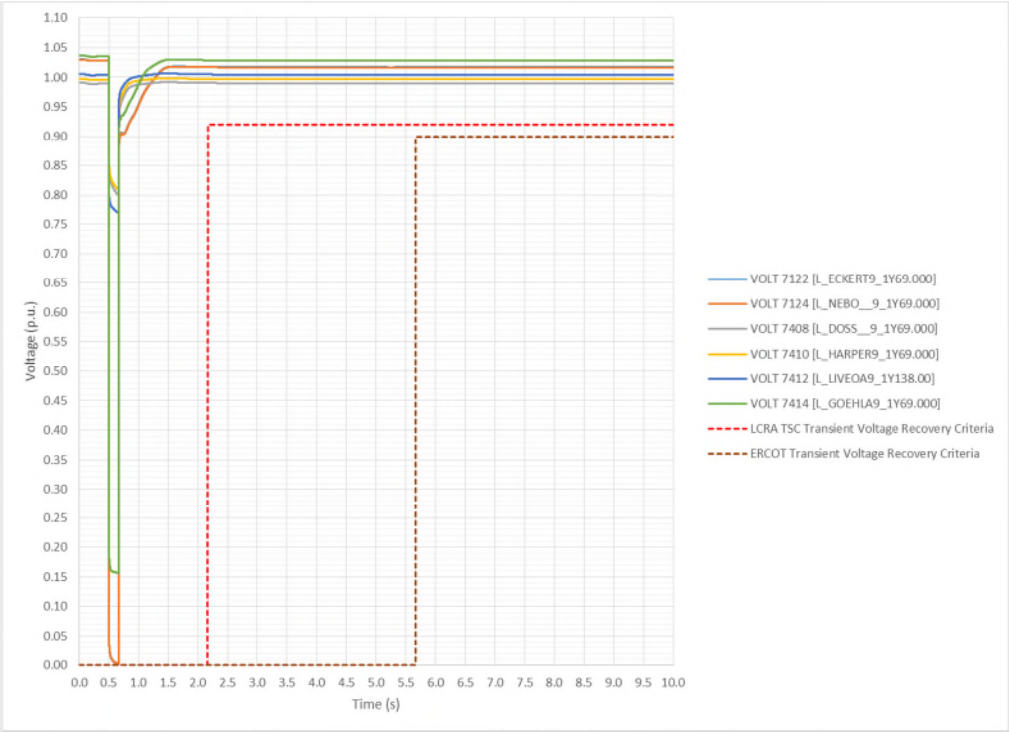

FIGURE 4: ALTERNATIVE 1 VOLTAGE RECOVERY

CONSEQUENTIAL LOAD LOSS CONSIDERATIONS

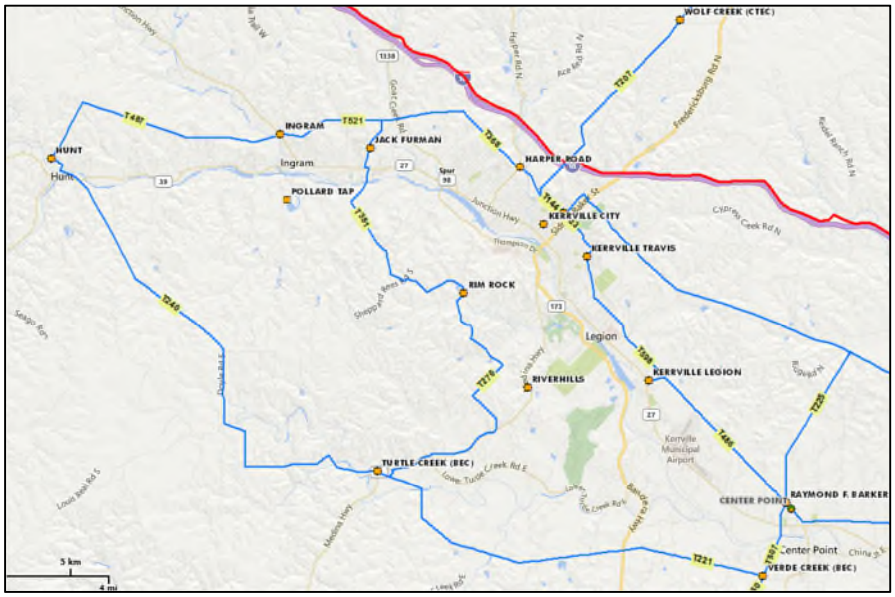

FIGURE 5: 138-KV LOOP WEST OF KERRVILLE

In the winter 2020/2021 base case, the 138-kV loop to the west of Kerrville shown in Figure 5, which serves Hunt and Ingram substations, supports the load served by six substations with a total of 100.6 MW of load at winter peak in 2020/2021. This 52 mile long transmission loop is subject to consequential load loss of up to 100.6 MW when certain segments are not available for service. These conditions are anticipated for the contingency combinations listed in Table 8 below.

TABLE 8: WINTER 2020-2021 P6 CONTINGENCY LOAD LOSS CONDITIONS

Contingency 1	Contingency 2	Base Case, Alt 3		Alt 1, Alt 2	
		Number of Stations	Load (MW)	Number of Stations	Load (MW)
7138 L_KERRST8_1Y138.00 7140 L_HARPRO8_1Y138.00 1	7146 L_VERDCR8_1Y138.00 7442 L_TURTCR8_1Y138.00 1	6	100.6	0	0
7140 L_HARPRO8_1Y138.00 7141 L_JACKFU8_1Y138.00 1	7146 L_VERDCR8_1Y138.00 7442 L_TURTCR8_1Y138.00 1	5	71.4	0	0
7141 L_JACKFU8_1Y138.00 7142 L_INGRAM8_1Y138.00 1	7144 L_HUNT__8_1Y138.00 7442 L_TURTCR8_1Y138.00 1	2	29.6	0	0

Only Alternatives 1 and 2 eliminate the risk of load loss for P6 contingencies named in Table 8. Since Alternative 3 does not connect to the 138-kV loop west of Kerrville, it does not provide this system benefit.

3.2 SUMMARY OF ALTERNATIVE BENEFITS

The benefits of the alternatives are summarized in Table 9 below. Alternatives 1 and 2 address all of the needs as defined in this study; however, Alternative 1 does so at a significantly lower cost and with nearly equal system benefit making it the recommended alternative.

TABLE 9: SUMMARY OF ALTERNATIVE BENEFITS

ALT	Alternative Name	Looped Transmission Service	Transmission Service to Mountain Home	Meets Thermal & Voltage Criteria	Long Term Growth	Meets Distribution Feeder Loading Criteria	Addresses Load Loss (Table 8)	Cost in Millions ($)
1	Hunt	Yes	Yes	Yes	Yes	Yes	Yes	77.3
2	Ingram	Yes	Yes	Yes	Yes	Yes	Yes	82.3
3	Wolf Creek	Yes	Yes	Yes	Yes	Yes	No	97.7

4 CONCLUSION

The recommended alternative (Alternative 1) is to construct a new 138-kV Mountain Home Substation near the intersection of Highway 41 and Highway 27 (exact location to be determined), construct a new 138-kV transmission line from the existing Hunt Substation to Mountain Home continuing to Harper Substation, and convert the existing 69-kV line from Harper to Live Oak to 138-kV.

This alternative provides the greatest system benefit at the lowest cost. The proposed project provides looped transmission service to loads currently served from Harper Substation meeting transmission planning criteria and improving reliability. It also provides looped transmission service to a new Mountain Home Substation, which corrects feeder loading in the area southwest of Harper Substation while also providing distribution backup to Harper and Ingram substations. Voltage performance at Harper and Doss substations, which otherwise violates LCRA TSC and ERCOT low voltage planning criteria, is improved to meet LCRA TSC and ERCOT criteria. Additionally, the project eliminates overload conditions and frees up capacity on the Gillespie and Fredericksburg autotransformers such that they can adequately serve area loads for the long-term. Finally, the new source into the transmission loops west of Kerrville eliminates the current system vulnerability of up to 100 MW of consequential load loss for overlapping single contingencies.

5 SUPPORTING INFORMATION

1. 16SSWG_2020_SUM1_Final_07012016.raw
2. 2021 WIN1 LCRA TSC load changes (2021_WIN1_Load.idv)
3. Alternatives evaluated:
    a. Alternative 1 (Alt1.idv)
    b. Alternative 2 (Alt2.idv)
    c. Alternative 3 (Alt3.idv)

6 APPENDIX A

TABLE 10: 2020/2021 WINTER SUMMARY NERC P0, P1, P2.1, P7-ERCOT1, P3-ERCOT2, P6-ERCOT3

Monitored Element			Contingency		Maximum Loading % of Rate B			
Branch	Rate A	Rate B	NERC Category	ERCOT Planning Guide	BASE CASE	ALT1	ALT2	ALT3
7130 L_GILLES9_1Y69.000 7132 L_GILLES8_1Y138.00 1	45	49	P0	N/A	62	33.2	33.2	33.2
			P1	N/A	108.4	51.3	51.3	51.3
			P2.1	N/A	62.4	33.8	33.8	33.8
			P7	ERCOT 1	75.5	47.3	47.4	47.3
			P3	ERCOT 2	109	51.3	51.3	51.3
			P6	ERCOT 3	108.8	52	52	52
7149 L_FREDER8_1Y138.00 7415 L_FREDER9_1Y69.000 1	45	49	P0	N/A	55.5	26.5	26.5	26.5
			P1	N/A	103	47	47	47
			P2.1	N/A	55.7	26.7	26.7	26.7
			P7	ERCOT 1	99.5	33.5	33.5	33.6
			P3	ERCOT 2	104.1	48.1	48.1	48.1
			P6	ERCOT 3	103.5	47.5	47.5	47.6
7413 L_GOEHTA9_1Y69.000 7415 L_FREDER9_1Y69.000 1	58	58	P0	N/A	45.3	21.6	21.6	21.7
			P1	N/A	84.4	38.3	38.3	38.3
			P2.1	N/A	45.5	21.7	21.7	21.8
			P7	ERCOT 1	81.5	27.4	27.4	27.4
			P3	ERCOT 2	85.3	39.3	39.3	39.2
			P6	ERCOT 3	84.8	38.7	38.7	38.7

LCRA TSC Mountain Home Substation and Transmission Line Addition Project–Comment Form

Date	12/13/2016

From:	
Name	Tyler Pansing
E-mail Address	t.pansing@banderaelectric.com
Company	Bandera Electric Cooperative (BEC)

BEC submits these comments in support of the LCRA TSC and CTEC Mountain Home project.

This project will improve reliability for BEC by providing a new 138-kV source into the Kerrville and surrounding area which is served partially by BEC.

Providing another 138-kV source will reduce the risk for consequential load loss during overlapping single (i.e. NERC P6) contingencies and improve operational flexibility & maintainability of the area transmission system. The new source will also increase the geographic diversity of the area transmission and improve reliability during severe system conditions.

Kristian Koellner

From:	Lou Graves <lgraves@kpub.com>
Sent:	Monday, December 19, 2016 1:41 PM
To:	REGPLANGROUP@LISTS.ERCOT.COM
Subject:	Mountain Home Substation and Transmission Line Addition Project
Attachments:	Mountain Home_Project-KPUB Comments.docx

Message received from an external source

ERCOT Regional Planning Group,

Attached is a write-up that KPUB is submitting in reference to the Mountain Home Substation and Transmission project review process.

Thanks,

Lou Graves,

Supervisor Substation Engineering & Operations

Safety. Our Way of Life.

Kerrville Public Utility Board

PO Box 294999

Kerrville, TX 78029

Phone - (830) 792-8241

Fax - (830) 257-8078

E-mail – lgraves@kpub.com

LCRA TSC Mountain Home Substation and Transmission Line Addition Project–Comment Form

Date	12/19/16

From:	
Name	Lou Graves
E-mail Address	lgraves@kpub.com
Company	Kerrville Public Utilities Board (KPUB)

KPUB is writing in support of the LCRA TSC and CTEC Mountain Home project.

This project will improve reliability for KPUB by providing another 138-kV source into the Kerrville and surrounding area which is served in part by KPUB.

The provision of another 138-kV source will reduce the potential for consequential load loss during overlapping single (NERC P6) contingencies and improve operational flexibility and maintainability of the area transmission system. The additional source will also increase geographic diversity of local transmission and improve reliability during extreme system conditions.

LCRA TSC Mountain Home Substation and Transmission Line Addition Project–Comment Form

Archived: Tuesday, March 19, 2019 11:48:52 AM
From: Regional Planning Group
Sent: Thursday, September 14, 2017 11:18:08 AM
To: REGPLANGROUP@LISTS.ERCOT.COM
Subject: LCRA TSC Mountain Home Substation and Transmission Line Addition Project- End of RPG review
Importance: Normal

Message received from an external source

******* EXTERNAL email. Please be cautious and evaluate before you click on links, open attachments, or provide credentials. *******

RPG,

The LCRA TSC Mountain Home project was originally submitted to the RPG with the objective of providing a transmission source to a new load-serving transmission substation. The project went through RPG review and received only comments in support of the project.

LCRA TSC's submission states that the proposed project is required to meet the reliability needs of the Central Texas Electric Cooperative (CTEC) and LCRA TSC planning criteria for load-serving substation reliability. ERCOT has therefore determined that the project should be reclassified as a "Tier 4 Neutral project." ERCOT has determined that the project as proposed will not result in any violations of NERC or ERCOT performance requirements. This concludes the RPG review.

Thanks,

Prabhu Gnanam
Manager, Transmission and Interconnection Studies
Electric Reliability Council of Texas
2705 West Lake Drive | Taylor, TX 76574
Ph: 512-248-3146| gnanaprabhu.gnanam@ercot.com

cid:image002.jpg
@01D1DC4E.EE

Privileged/Confidential Information may be contained in this message. If you are not the addressee indicated in this message (or responsible for delivery of the message to such person), you may not copy or deliver this message to anyone. In such case, you should destroy this message and notify the sender by reply email. Please advise immediately if you or your employer do not consent to Internet email for messages of this kind. Opinions, conclusions and other information in this message that do not relate to the official business of ERCOT shall be understood as neither given nor endorsed by it.